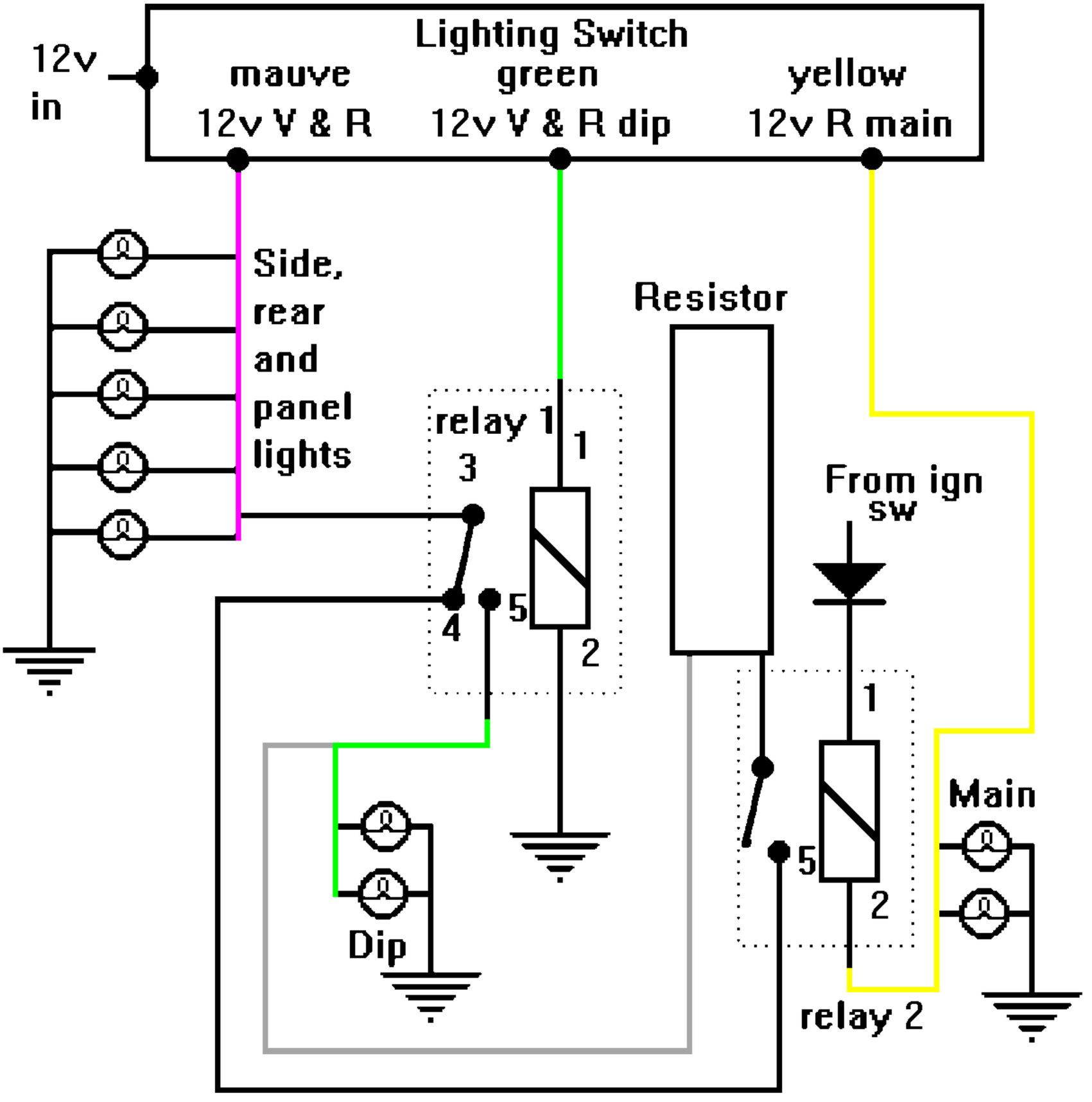
Lighting Switch
12v in
mauve
12v V & R
green
12v V & R dip
yellow
12v R main
Side, rear and panel lights
Resistor
relay 1
1
3
4
5
2
From ign sw
1
5
2
Main
Dip
relay 2

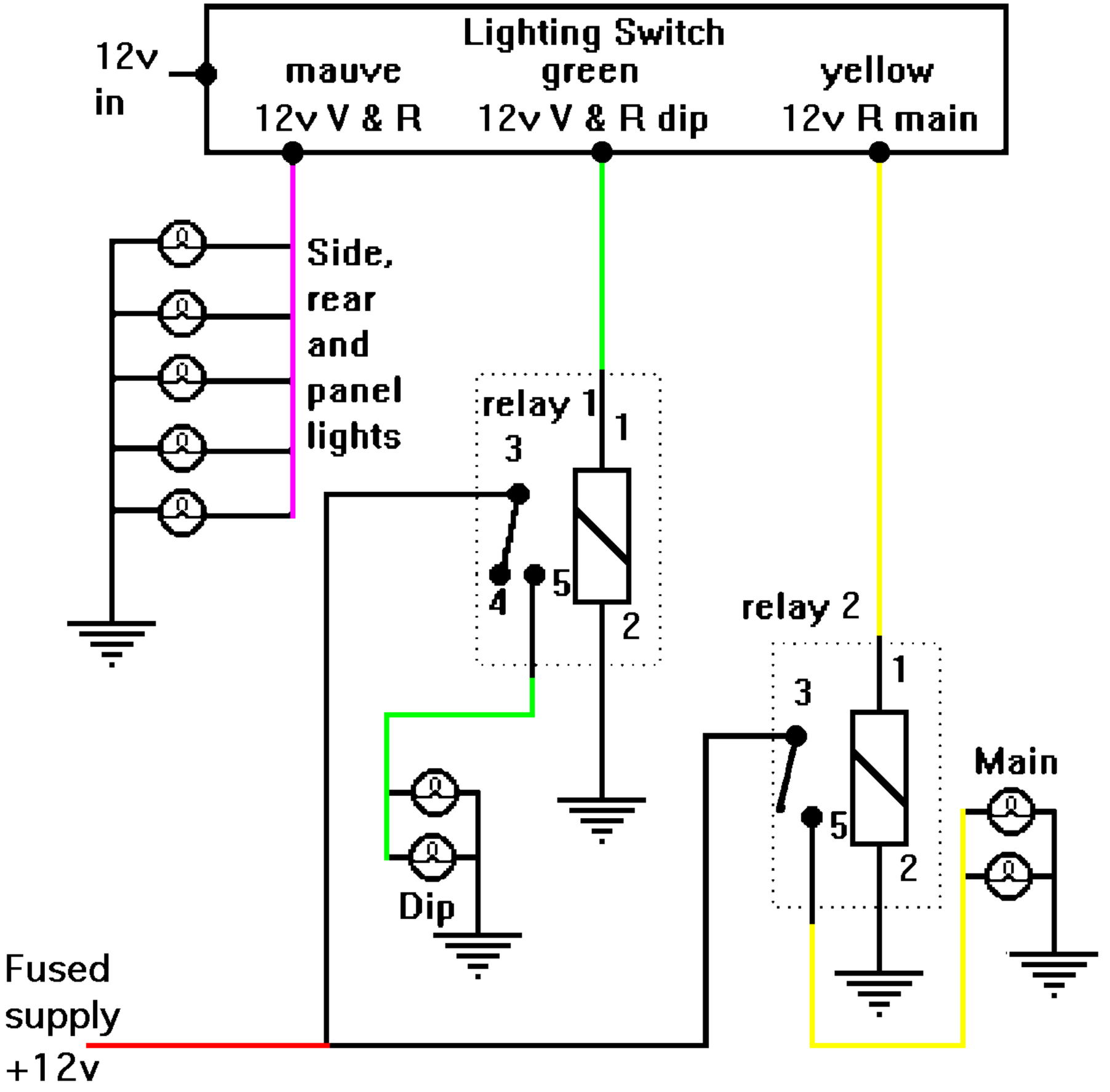
Lighting Switch
12v in
mauve
12v V & R
green
12v V & R dip
yellow
12v R main
Side, rear and panel lights
relay 1
1
2
3
4
5
relay 2
1
2
3
5
Dip
Main
Fused supply +12v